GardePro®

X50

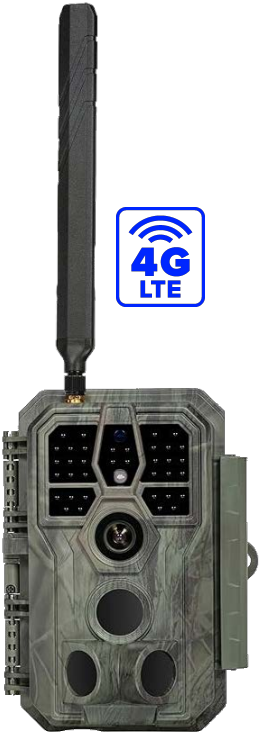

(Phone not included)

INSTRUCTION MANUAL

Doc V1.3

Congratulations on your purchase of one of the best trail cameras on the market! We appreciate your business and want to earn your trust. Please refer to the notes below and the instructions in this manual to ensure that you are completely satisfied with this product.

In case of any further questions or concerns, please get in touch with **info@cameratraps.co.za**

Est. 2007

CAMERA TRAPS cc

YOUR PATIENT WITNESS

www.cameratraps.co.za

TABLE OF CONTENTS

1. IN THE BOX 1
2. IMPORTANT NOTE 1
3. INTRODUCTION 2
4. PARTS AND CONTROLS 3
5. INSTALLING THE BATTERIES AND SD CARD 7
6. THE OFF, ON, AND SURVEILLANCE MODES 9
6.1. OFF Mode 9
6.2. ON Mode 9
6.3. SURVEILLANCE Mode 10
7. CELLULAR CONNECTION 10
7.1. Download GardePro Mobile App 10
7.2. Add Your Camera 11
7.3. Login Your Account 11
7.4. Activate Camera 12
7.5. App Navigation 15
7.6. Get the First Picture 16
7.7. View Photo or Video 16
8. ADVANCED SETTINGS 17
9. MOUNTING AND POSITIONING 23
9.1. Mounting 23
9.2. Sensing Angle and Distance Test 24
9.3. Starting 25
10. REVIEW PHOTOS OR VIDEOS 26
11. TECHNICAL SPECIFICATIONS 26
12. TROUBLESHOOTING 28
13. WARRANTY 29

1. IN THE BOX

1 x Camera, 1 x Mounting Strap, 1 x Antenna, 1 x Camera Instruction Manual, 1 x Type-C USB Cord.
Note: AA batteries and Network SIM card not included (user supplied).

2. IMPORTANT NOTE

2.1. About Batteries

Require eight (8) 1.5V AA Alkaline or Lithium batteries. We recommend the use of Energizer AA Lithium batteries in this camera to obtain maximum battery life.
Do not mix old and new batteries. Do not mix battery type.

Rechargeable NiMH AA batteries can be used, but the lower voltage (generally 1.2V) they produce has short lifetime, you may have to replace them frequently.

Remove batteries when the camera is NOT in use.

2.2. About SD Card

Require a standard-size SDHC/SDXC memory card (maximum capacity 512GB, Class 10). Recommend using SanDisk 32GB SDHC Class 10 memory cards in the camera to obtain the best cost-performance.

Before first use, please format your SD card in the camera by using "Format SD Card" in the menu settings.

2.3. About SIM Card

<u>The camera accepts a nano size SIM card (pic below)</u>

Please make sure the cellular signal is good where your camera is installed. Please don't remove the SIM card. If you have multiple cameras, please don't exchange SIM cards among them.

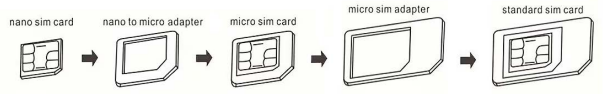

3. INTRODUCTION

3.1. About the Camera

The GardePro X50 is a new generation of 4G LTE cellular trail camera. The camera has a built-in cellular module, allows you remotely connect and operate the camera through a dedicated App ("GardePro Mobile"). The camera will send pictures to cell phone according to the Transfer Schedule specified in the App. The camera also features the all-new innovative and ultra-clear imaging technology, encompasses smart night vision, blur reduction, and noise reduction technology to deliver high resolution image quality.

3.2. Main Features

- Quick activation by App
- Offers affordable and flexible data plan
- Program your camera via App
- Send pictures to cell phone
- High quality pictures (32MP still photos), 1296P 20fps or

1080P 30fps H.264 video clips with audio

- Clear night vision, flash range 100ft, equipped with 36pcs high performance infrared no glow 940nm LEDs that function as a flash (invisible to eyes)
- Wide view angle - 70°
- Easy to use/program with well-designed operation buttons and built-in 2.4-inch color screen, easy to program, review pictures and videos on the screen
- Three working modes - Motion detection, Time lapse and Hybrid
- Fast trigger time approx. 0.1~0.5 seconds (pre-activated technology with 3 PIR sensors designed), Fast recovery time of less than 0.5 seconds, Long trigger distance up to 90ft
- Info strip on each capture: Date, Time, Temperature & Moon phase
- Operation Hours, Loop Recording, Time Lapse, Password Protected
- Built for any climate - IP66, Operation Temperature: -4~140°F
- Support SD/SDHC/SDXC memory card, maximum capacity 512GB *(not included)*

4. PARTS AND CONTROLS

The camera is equipped with an antenna, 36pcs infrared LEDs, Indicator, Light Sensor, Optical Lens, PIR Sensors, Lock Holes in front view (*Figure 1*).

TIP: During use, the black PIR Lens may be dirty or have scratches, however it does not affect the performance due to the reliability design. If you must clean it, please try to blow it off or pick out the dirt very lightly. Please do not try to wipe it, which may cause more scratches.

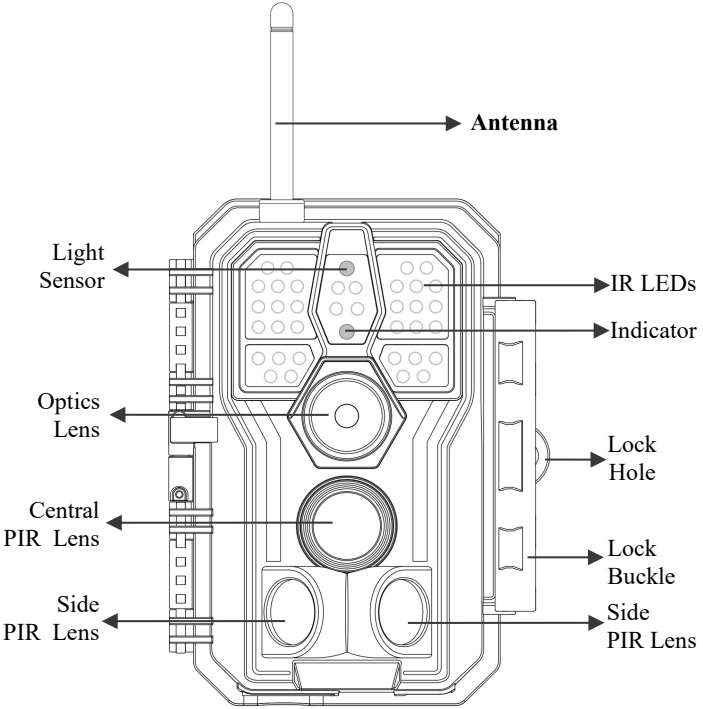

Figure 1: Front View

Install the antenna: The antenna is placed in the accessory slot of the package box. Please screw the antenna into the mounting base on the top of the camera and securely tighten it (*Figure 1*).

The camera provides the following connections for external devices: Mini USB port and SD card slot etc. *(Figure 2).*

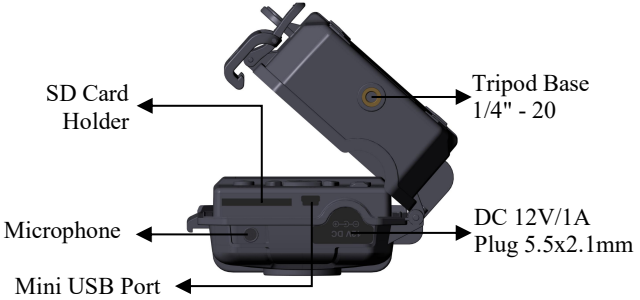

Figure 2: Bottom View

The camera has one security cable hole and two strap holes on the back. The strap can be put through the strap holes and fastened securely around a tree trunk by pulling the end of the strap firmly (*Figure 3*).

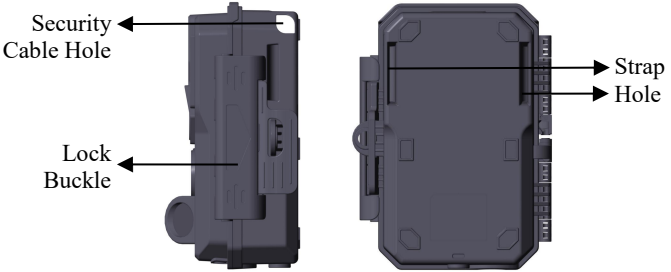

Figure 3: Right / Back View

The camera has a 2.4-inch built-in LCD screen, which can be used for reviewing pictures or videos and menu displaying, and exclusive keypad design for easy program and operation, 8 AA batteries slot supported (*Figure 4)*.

Figure 4: Inside View and Preinstalled SIM card

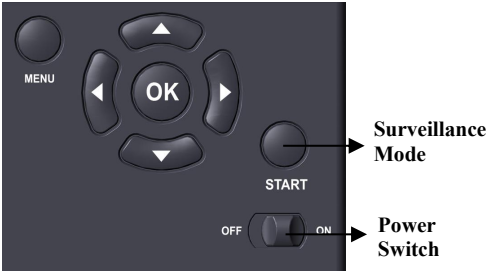

Figure 5: Operation Buttons

A power switch is used to power on (**ON** mode) or off the camera (**OFF** mode). A **START** button is used to quickly make the camera into the surveillance mode (motion detection) or time lapse per your settings *(Figure 5)*. When the camera is in the surveillance mode, press the **START** button to wake up the camera.

5. INSTALLING THE BATTERIES AND SD CARD

The Nano-SIM card is preinstalled, please don't remove it. Before you begin learning how to use your camera, you will first need to install 8 AA batteries and insert an SD card. Although that may only take you a minute, there are some important notes about batteries and SD cards you should be aware of, so please take the time to **read the following directions and cautions**:

5.1. Loading Batteries

After opening the cover of the battery compartment, you will see that the camera has eight battery slots (*Figure 6*). A full eight batteries must be installed for the camera to operate. Be sure to insert each battery with correct polarity (negative or "flat" end against the long spring of each battery slot).

In **ON** mode when battery power level gets low, the message "**Low Battery**" will show on the screen, please replace the batteries. If the battery indicator shows in **RED**, this does mean the batteries are not able to drive IR LEDs flash at night, however the batteries still work at daytime until "**Low Battery**". If you want to continue night vision, please replace the batteries.

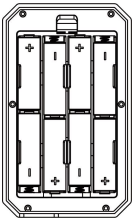

Figure 6: Loading the Batteries

5.2. Inserting the SD Card

Insert the SD card (with the camera powered off), before beginning to operate the camera. Don't insert or remove the SD card when the camera is powered on or in the surveillance mode. (*Figure 7*).

Figure 7: Inserting the SD Card

The following describes how to insert and remove the SD card:

- Insert the SD card into the card slot with its label side upwards. A "click" sound indicates that the card is installed successfully. If the wrong side of the card is facing up, you will not be able to insert it without force, there is only one correct way to insert cards. If the SD card is not installed correctly, the device will not display an SD card icon on the screen in **ON** mode. **Formatting the SD card** by using the camera's "Format SD Card" menu option before first use is recommended, especially when a card has been used in other devices.
- To take out the SD card, just gently push in the card (do not try to pull it out without pushing in first). The card is released from the slot and ready to be removed when you hear the click. Be sure the camera's power is switched **OFF** before inserting or removing SD cards or batteries.

6. THE OFF, ON, AND SURVEILLANCE MODES

The camera has three basic operational modes:

- **OFF** mode: Power switch in the **OFF** position (The camera is powered off).
- **ON** mode: Power switch in the **ON** position (The camera is powered on and its screen is on).
- **SURVEILLANCE** mode: When the camera is powered on, press **START** button to enter the surveillance mode. When the screen is off, the camera enters standby and will perform according to your settings.

6.1. OFF Mode

The **OFF** mode is the "safe" mode when any actions must be taken, e.g., replacing the SD card or batteries, or transporting the device. And of course, when you are storing or not using the camera, you will switch it to **OFF.** Please note that in the **OFF** mode the camera still consumes a little power. It's a good idea to take the batteries out of the battery compartment if the camera will not be used for a long time.

6.2. ON Mode

In the **ON** mode you can check and change the settings of the camera with the help of its built-in screen. These settings, found in the menu by pressing **MENU** key, let you change the photo or video resolution, interval between photos, switch the time imprint on, etc. *(See more in **Section 8 ADVANCED SETTINGS**).*

On the screen display, you will see an information screen that shows how many images have been taken, the battery level, camera or video mode, etc.

***Attention please**: In the **ON** mode, the camera will automatically enter* **SURVEILLANCE** *mode if there is no operation (key pressing) within **3** minutes. Then the camera will perform as your settings in the menu.*

In the **ON** mode, you can connect the camera to a computer's USB port to download your images.

6.3. SURVEILLANCE Mode

Any time after the batteries and SD card have been inserted, you can switch on the camera. When the **START** button is pressed, the camera will enter into the **SURVEILLANCE** mode. If the Mode in the settings is set as "Motion Detection", the camera will count down a 30-second delay and then be ready to capture images. If the Mode is set as "Time Lapse", there will be no 30-second counting down, and the camera will be ready to enter Time Lapse.

Once in the **SURVEILLANCE** mode, no manual controls are needed or possible (the control keys have no effect). The camera will take photos or videos automatically (according to its current parameter settings).

TIP: You can press the **START** button again to wake up the camera and reprogram your camera if required.

7. CELLULAR CONNECTION

7.1. Download GardePro Mobile App

Before using the cellular functionality, please download the "GardePro Mobile" App.

NOTES:
The screenshots shown in this section are indicative only. The actual diagram on different versions of App, iOS and Android may differ.

During the use of the App, please grant the App access to storage, location, camera and local network *(if on iOS14 or later)* of your device.

7.2. Add Your Camera

Open the App, Please tap **Cellular Camera**.
The App is an unified App, supports cellular camera and Wi-Fi camera (sold separately).

7.3. Login Your Account

Log in to your account to manage your cellular cameras, please tap Log in.
Please enter your account and password to log in.

If you are using a cellular camera for the first time and don't have an account, **please select your region where the camera is applicable, then tap "Sign up" to create a new account *(Figure 8).***

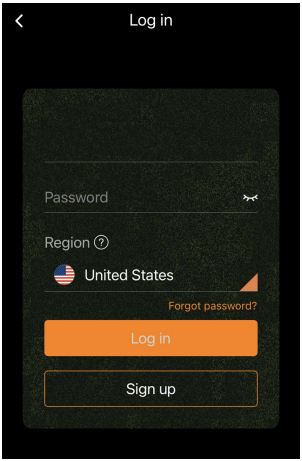

Figure 8: Selecting Your Region (select "United States" if in the US)

Note: *Once you have signed up, the next time you log in, or if you forget your password and need to update your password, please make sure that the selected region is correct.*

Input your email, read and accept the Privacy Agreement. Tap "Next", you will receive a verification code in your email in minutes, please check your email later, find the code and input it in the next dialog.

7.4. Activate Camera

After logged in your account, please make sure your camera is near to you and in the **ON** mode.

Please follow the "**Quick Start**" instructions (steps) shown on the App to configure the cellular network of your camera.

During setup, the App may ask access permission such as

camera to scan QR code, please allow it to complete the process.

At the final step of Quick Start, go to the "Activation Code" in the camera MENU settings, scan the QR code with the App.

Once scanned, the camera starts activating the SIM card, you can press **MENU** to exit. The icons at the top of the camera screen will change accordingly *(Figure 9)*.

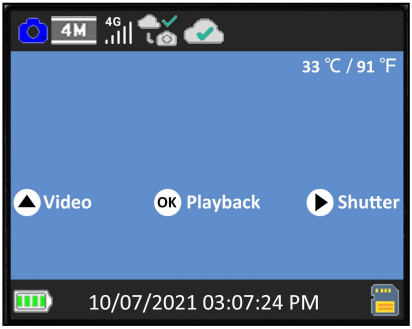

Figure 9: Icons at the top of the camera screen

Wait for the cellular is connected and device is activated (until the following icons shows on the top bar of camera screen).

During the activating, there are icons to indicate the cellular status *(Table 1)*:

Table 1 - Camera network icons

Category	Icon	Description
Cellular Signal		No SIM card detected.
		The camera is searching for available cellular network.
		No cellular network service available.
		"4G" indicates the camera is using 4G cellular network, it may automatically change to "3G" or "2G" (according to local cellular network), and the white "signal bar" indicates signal strength. *Note: In 3G or 4G cellular network, the camera can send pictures or videos. In 2G cellular network, the camera can ONLY upload camera status.*
Cellular Connection		Cellular network is not connected.
		The camera is not within the cellular network service area.
		Cellular network is successfully connected.
Device Activation		The camera is not activated.
		The camera and the SIM card is unmatched (e.g. the camera has been bound with other SIM card).
		The camera has been activated successfully.

In the App, once device is activated, the orange bar on the App will turn into a green bar (*Figure 10- 11*).

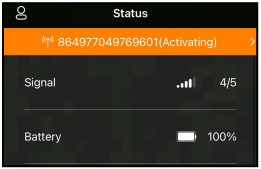

Figure 10: Activating

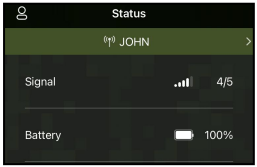

Figure 11: Activated

The ID "864977049769601" (cellular ID, just for example) will turn into your camera name (e.g. you have programmed your camera name as "JOHN"). Please note this ID may vary from different camera and its SIM card.

7.5. App Navigation

Once the camera is fully activated, you can navigate the App. The App supplies 4 main tabs: Plan, Status, Settings and Gallery (*Table 2)*.

Table 2 - App Navigation

Tab	Description
Plan	List status of your current data plan, e.g. total remaining effective days and remaining the amount of data plan for this cycle. You can order a new plan or order HD photos and Videos on demand.
Status	Camera status, including battery level, total SD card capacity and used capacity, internal temperature of the camera, number of pictures and videos stored on the SD Card, modem ID, camera model, firmware version number, etc.

Settings	Display or program camera settings, such as mode, picture quality etc.
Gallery	Review or download the pictures or videos the camera has taken.

7.6. Get the First Picture

After you successfully activate the camera, you would like to get the first picture from the camera:

- Open the app, go to ***Settings*** Tab, toggle ***Transfer on Each Capture*** to ON.
- Turn on the camera, make sure the camera is powered on *(screen is on)*. Once the camera has successfully connected to the cellular network *(indicated the icons on the top of the camera screen show as below)*,

  press the **START** button and wait for the camera to enter surveillance mode.
- Walk through in front of the camera.
- Check the Gallery tab in the app, generally in several minutes you will get the picture sent from the camera.
- <u>After you successfully get the first picture, please remind toggling ***Transfer on Each Capture*** to OFF to avoid consuming more battery power.</u>

7.7. View Photo or Video

Open the App Gallery tab to view, download, save or delete the photos or videos.

8. ADVANCED SETTINGS

The trail camera comes with preset manufacturer settings. You can change the settings to meet your requirements. Once the camera screen is on, press **MENU** key to enter/exit the menu. Press the **UP/DOWN** key to move the marker, Press the **LEFT/RIGHT** key to change the setting, and press the **OK** key to confirm the change. Always remember to press the **OK** to save the change. Otherwise, you will lose your new setting.

Also you can program your camera in the App.
Note: All camera settings programmed through the App will not take effect until the next "Cellular Transfer" cycle. After the setting takes effect, the orange bar on the left of the modified settings will disappear. Considering cellular network transmission speed and power saving, the App will limit photo quality and size, video quality and length.

Parameter	**Settings** (**Bold** = default)	**Description**
Cellular	**On** Off	Selecting On to enable cellular, you can use the App to connect the cellular network. Selecting Off to disable cellular, the camera will operate in stand-alone mode and save battery power.
APN		Only can be programmed in the camera. Reserved for future use. Please don't change it.
Activation Code		It is used for activating the camera. Scan it in the App during the setup.
Cellular Info		Details of cellular modem and network, such as Adapter, IMEI, Configure, Status,

		Signal, SIM, Network, Name, PIN, ICCID, IMSI, APN, PDP etc.
Cellular Transfer *(Only on app settings)*	**Transfer on Each Capture:** On/**Off**	Selecting **On**, the cellular network will send picture to phone after each capture by the camera. ***IMPORTANT Note: Enabling it will significantly consume battery power due to frequent uploads. Set it to Off in most cases.***
	First Transfer time: hh:mm	Select the first time that the cellular network sends picture to phone (if camera has taken photos).
	Transfer Interval: 00:30 -24:00 (1 day)	Select the transfer interval, e.g. 6, 12, 24 hours to conserve battery power. *Note: Due to network reasons, the actual transfer time may be delayed few minutes from the specified time.*
Cellular Photo Quality	320 x 180, **640 x 360**	Select desired resolution for Cellular photos (preview photos in App Gallery).
Mode	**Motion Detection**, Time Lapse, Hybrid	In **Motion Detection** mode, the camera will take photos or videos once triggered. In **Time Lapse** mode, the camera will take photos or videos periodically according to your preset "Timelapse Interval" parameter. **Hybrid** mode includes both above.
Photo or Video	**Photo,** Video, Photo+ Video	Select whether still photos or video clips are taken.
		Select desired resolution for still photos.

Photo Quality	32MP 24MP 16MP 8MP **4MP**	Higher resolution produces better quality photos, but creates larger files that take more of the SD card capacity. Larger files require longer time to write to the SD card, which will slightly slow the shutter speed.
Photo Burst	**01,** 02, 03	Select the number of photos taken in sequence per trigger.
Video Quality	1296P **1080P** 720P	Select video resolution (pixels per frame). Higher resolution produces better quality videos, but creates larger files that take more of the SD card capacity.
Video Length	**10 seconds**, Optional from 3s to 5m	Select video recording length. *Note: It is highly recommended to set the night video length to less than 30 seconds as the IR LEDs will consume more battery power. When the cellular is ON, the video length is limited to max. 10 seconds.*
Video Sound	**On** Off	Selecting **On** will record video with sound.
Video Format	**MP4** MOV	MP4 is the mainstream format in the video industry, more compatible with any player. Select MOV in case some legacy digital camera software must be working with videos in MOV format.
Detection Delay	**10 seconds**, optional from 3s to 60m	Select the shortest length of time that the camera will wait until it responds to any subsequent triggers from the PIR sensor after a game is first detected. During the selected interval, the camera will not take pictures/videos. This prevents the SD card from filling up with too many redundant

		images. *Note: This option is invalid if **Mode** is set as "Time Lapse".*
PIR Sensitivity	High, **Medium** Low	Select the sensitivity of the PIR sensor. Temperature affects the sensitivity. The High setting is suitable when you want to capture distant objects or capture more, and the Low setting is good for less false trigger. *Note: this option is invalid if **Mode** is set as "Time Lapse".*
Side Motion Sensors	On **Off**	Selecting **On** will activate the side motion sensors. It brings faster trigger speeds and helps capture fast moving animals. When any of the two side motion sensors detects a motion event, the camera will be pre-activated. While the animal enters the detection area of the center motion sensor, the camera will start taking photos or videos. Select **Off** to save batteries power.
Motion Test		This feature helps you aim the camera at your target area. Please refer to the details in *Section 9.2*.
Timelapse Interval	**First Shot Time:** hh:mm	Set the earliest shot time after Time Lapse or Hybrid mode is enabled. If you would like to get photos earlier, it is recommended to set it later than the current time.
	Interval: optional from 3s to 24h	Set time lapse interval. It takes effect ONLY when **Mode** is set as Time Lapse or Hybrid, the camera will automatically take photos/videos according to the set

		interval, regardless of whether the PIR sensor has detected any game. This is helpful when observing cold-blooded animals like snakes, or the process of flowering, etc. *Note: This option is invalid if **Mode** is set as "Motion Detection".*
Timelapse Period	On **Off**	Selecting **On** to set a specific working time period for your camera in Time Lapse mode or Hybrid mode. You can set up to 2 different time periods for the camera, and it will not capture time-lapse photos or videos outside of those periods. *Note: This option is invalid if **Mode** is set as "Motion Detection".*
Date / Time	M/D/Y hh:mm AM/PM	M – Month, D – Day, Y – Year hh – Hour, mm – Minute *Note: Use "**LEFT/RIGHT**" key to switch parameters, use "**UP/DOWN**" to set current date and time. Date input format may change. Please refer to "**Date Format**" parameter settings accordingly.*
Date Format	D/M/Y **M/D/Y** Y/M/D	Select date format which will be shown on the screen and each capture.
Time Format	**12h** 24h	Select time format which will be shown on the screen and each capture. 12h - AM/PM
Camera Name	On **Off**	Select **On** to assign a name, 4-character long, in the form of Capital A-Z, 0-9 to record the location in the photos (e.g. A123 for Yellow Stone Park). This helps

		multi-camera users identify the location when reviewing the photos.
Info Strip	**On** Off	Select **On** to show date, time, temperature, moon phase on each capture.
Loop Recording	On **Off**	Selecting **On** option will cause the oldest files to be overwritten with new captures when the SD card reaches its capacity. With **Off** option selected, the camera will stop capturing images once the SD card reaches capacity.
Operation Hours	On **Off**	Select **On** if you only want the camera to work within a specified time period every day. For instance, if the starting time is set at 18:35 and the ending time at 8:25, the camera will function from 18:35 the current day to 8:25 the next day. Outside the time period the camera will not be triggered. *Note: This option is ONLY valid if **Mode** is set as "Motion Detection"* .
Password	On **Off**	Set up a 4-digit password to protect your camera from unauthorized users. If the code is lost, you can contact customer support to reset the password.
Format SD Card	Yes **No**	All files will be deleted after formatting the SD card. It's highly recommended that you format the SD card if it has been used previously in other devices. ***Caution: make sure wanted files on the SD card have been backed up first!***
Factory Reset	Yes **No**	Selecting **Yes** will return all your previous settings back to the manufacturer default.

Version	Defined	Display the version of the camera.

9. MOUNTING AND POSITIONING

9.1. Mounting

After you've set up the camera's parameters to your personal preferences at home, you're ready to take it outside. When setting up the camera for scouting game or other outdoor applications, you must be sure to mount it in place correctly and securely.
For optimal picture quality, we recommend mounting the camera on a sturdy tree with a diameter of approximately 6 inches (15cm). The tree should be positioned about 16-17 feet (5m) away from the area you want to monitor. The camera should be placed at a height of 2.5-3.5 feet (0.75-1m). It's important to note that the best results will be obtained at night when the subject is within the ideal flash range. To achieve optimal results, ensure that the subject is positioned within a range of 10-100 feet (3-30m) from the camera.

There are two ways to mount the camera: using the provided adjustable web belt, or the tripod socket.
Using the adjustable strap: In order to use the strap on the camera**,** push one end of the strap through the two brackets on the back of the camera**.** Thread the end of the strap through the buckle. Fasten the strap securely around the tree trunk by pulling the end of the strap firmly so there is no slack left (*Figure 12*).
Using the tripod socket: The camera is equipped with a socket at the bottom end to enable mounting on a tripod or other mounting accessories with a standard *UNC 1/4-20* thread screw *(not included)*.

Figure 12: Mounting the Camera

9.2. Sensing Angle and Distance Test

In order to test whether the camera can effectively monitor the area you choose, this test is recommended to check the sensing angle and monitoring distance of the camera**.** To perform the test:

- Switch the camera to the ON mode.
- Press MENU button, go to "Motion Test". The camera will count down a max 60-second delay and be ready to capture motion. *(Note: The delay time may be less than 60 seconds, depending on the actual time of the motion sensor to be activated. The delay time is 60 seconds minus the power-on time.)*
- Close the camera door.
- Make movements in front of the camera at several positions within the area where you expect the game or subjects to be. Try different distances and angles from the camera.
- When the white motion indicator LED flashes in RED, it indicates that the camera is able to sense the position. However, if the LED doesn't blink, it means that the position lies beyond the sensing range. *(Note: The red light will blink only when the motion is within the sensing area of the central PIR sensor. The central sensor's sensing angle of view is 60°. Each of the side sensors has a 30° angle of view,*

which is only used to pre-activate the camera and accelerate the triggering speed, there is no RED light blinking whatever each of the side sensors detects motions.)

- In these sensing tests, the camera will take pictures once motion is captured. When you open the camera, the screen shows the number of times triggered, you can review the pictures on the screen.

The results of your testing will help you find the best placement when mounting and aiming the camera**.** The height above from the ground for placement of the device should vary with the size of animal you are hoping to see. In general, 3 to 6 feet is preferred.

You can avoid potential false triggers due to temperature and motion disturbances in front of the camera by not aiming it at a heat source or nearby tree branches or bush (especially on windy days).

Do NOT install the camera behind the glass window as that is not possible to sense any motion. Avoid aiming the camera toward to any glass objects.

9.3. Starting

The camera supports three working modes, "Motion Detection", "Time Lapse" and "Hybrid", press **START** button to enter surveillance mode.

(1) If you set the camera's working mode as "Motion detection" in the menu, the camera will count down a 30-second delay, and then will be ready to go into standby (surveillance) and capture. Any motion that is detected by it will trigger the capture of an image or video as programmed in the menu. Be sure you have read the descriptions of the Detection Delay, and PIR Sensitivity parameters.

(2) If you set the camera's working mode as "Time Lapse" in the menu, the camera will be ready to go into "Time Lapse" mode

soon after the START button is pressed, and then will take images periodically according to your preset "Timelapse Interval" parameter, regardless of the settings "Detection Delay".
(3) If you set the camera's working mode as "Hybrid" in the menu, the camera will work according to the above two modes.

10. REVIEW PHOTOS OR VIDEOS

After you have setup, mounted and activated your CAMERA, you will of course be eager to return later and review the images it has captured for you. The camera stores photos and videos in the folder \DCIM\100MEDIA in the SD card. Photos are saved with file names like DSCF0001.JPG and videos like DSCF0001.MP4. The MP4 video files can be played back on most popular media players, such as Windows Media Player, QuickTime, VLC etc.
There are different ways this can be done.
You can review photos or videos directly on the camera screen or in the app's gallery bar.
Or when the camera is powered on, you can use the provided USB cable to download the files to a computer.
Or you can put the SD card into an SD card "reader" *(not included)*, plug into a computer, and browse the files on the computer without downloading.

11. TECHNICAL SPECIFICATIONS

Element	Description
Cellular	LTE / 3G / 2G
App System Requirements	IOS 11.0 or later Android 7.0 or later

Working Mode	Motion detection, Time Lapse or Hybrid
Max. Pixel Size	32MP
Optics Lens	f/1.6, FOV=70°, Auto IR-Cut
IR Flash	100ft
LCD Screen	2.4" Color screen
Memory	SD, SDHC or SDXC standard memory card (Not included), max capacity 512GB
Picture Resolution	32MP, 24MP, 16MP, 8MP, 4MP
Video Resolution	2304 x 1296P@20fps (16:9), 1920 x 1080P@30fps (16:9), 1280 x 720P@30fps (16:9)
Image Format	Picture: JPEG, Video: H.264 MP4 / MOV
PIR Sensitivity	High/Normal/Low
PIR Sensing Distance	90ft (Below 77°F/25°C)
PIR Sensing Angle	Total 120° (while side motion sensors enabled) Central zone: 60°, Left side: 30°, Right side: 30°
Trigger Time	Approx. 0.1~0.5 seconds (0.1s while side motion sensors enabled)
Trigger Interval	0sec.-60min, Programmable
Shooting Numbers	1~3
Video Length	3sec ~ 5min., Programmable
Info Strip	On /Off
Operation Hours	On /Off, Specific working period of time
Password	4-Digit Code
Camera Name	4-Character (A-Z, 0-9)
Time Lapse Interval	3 Seconds ~ 24 Hours

Power Supply	8x1.5V AA Batteries (Not included)
Stand-by Time	8 Months in Stand-by
Auto Stand-by	Auto Stand-by (Surveillance mode) in 3 minutes while no operation in **ON** mode
Low Battery Alarm	8V - Low Battery (Batteries die) 9V - Night vision is unavailable in low voltage (Almost die)
Interface	Mini-USB, Standard size SD card holder, External Power (DC 12V/1A, Plug 5.5x2.1mm)
Mounting	Strap, Tripod Base (1/4-20)
Waterproof	IP66
Operation Temperature	-4~140°F/-20~60°C
Operation Humidity	5% ~ 95%
Product Dimensions	5.6 x 4.2 x 2.86 inch

12. TROUBLESHOOTING

If your camera does not seem to be functioning properly or if you are having photo/video quality issues, please run these simple and quick checks:

- Make sure the camera is powered on and in the right mode
- Format the SD card in the camera or replace the SD card, since the SD card is a storage media and sometimes it might be unstable
- Replace batteries if night vision seems not to be working as expected
- The dark background of night images is usually caused by strong reflections from the obstacles close to the camera. To get the best night image, please remove close-up obstacles (such as

walls or tree trunks) in front of the camera as possible, or adjust the installation position of your camera to avoid these obstacles *(Figure 13)*

Figure 13: Avoid close-up obstacles in front of the camera

If your unit is still having trouble, please contact us, providing us with your order number, or **check the website to determine that you are using the latest firmware and App.** Please be assured we will make the things right for you.

13. WARRANTY

ONE YEAR LIMITED WARRANTY

Your GardePro Trail Camera warranty covers your trail camera for one year after the original purchase date. We warrant that your camera will be free from defects in materials and workmanship when operated in normal use and conditions. This warranty does not cover consumer caused damages such as misuse, abuse, improper handling or installation, damaged caused by wild animals, or repairs attempted by someone other than our authorized technicians.

We will, at our option during the warranty period, repair your camera or replace it with the same or comparable model free of

charge. This warranty only extends to the original retail buyer from our authorized dealer. Purchase receipt, order number or other proof of the date of the original purchase is required to receive warranty benefits. The warranty on any replacement product provided under the original warranty shall be for the remaining portion of the warranty period applicable to the original product.

This warranty extends solely to failures due to defects in materials or workmanship under normal use. It does not cover normal wear of the product.

If you need to return a product under this warranty, please contact your dealer or our distributor.