HIKMICRO

PANTHER PQ50L

Thermal Image Scope (+ Laser Range Finder)

PANTHER

HIKMICRO PANTHER PQ50L Thermal Image Scope has 640 × 512 thermal detector and 1024 × 768 OLED monitor, which provides clear image under harsh environment conditions like darkness, fog, smoke, dust, rain, snow, wood, camouflage, etc. The scope is mainly applied to scenarios such as patrolling, hunting, etc.

Key Features

- 640 × 512 thermal resolution, high sensitivity detector, NETD< 35 mK (25°C, F# = 1.0)
- Image processing technology: Adaptive AGC, DDE, 3D DNR
- 1024 × 768 resolution 0.39-inch OLED display
- Supports distance measurement and hotspot function
- Supports video recording and snapshot, built-in EMMC (16 GB)
- Supports digital zoom and reticle function, palettes of color adjustable
- Observation Distance up to 3000 m

Specification

Thermal Module	
Image Sensor	Uncooled Focal Plane Array
Max. Resolution	640 × 512
Frame Rate	50 Hz
Pixel Interval	12 µm
Response Waveband	8 µm to 14 µm
NETD	< 35 mK (25°C, F# = 1.0)
Lens (Focal Length)	50 mm
Detection Range	3000 m
Field of View	8.80° × 7.03°
Min. Focusing Distance	5 m
Aperture	F1.0
Magnification	2.6×
Image Display	
Display	1024 × 768, 0.39 inch, OLED
Image Mode	Black Hot, White Hot, Red Hot, Fusion
FFC (Flat Field Correction) Mode	Auto, Manual, External Correction
Exit Pupil	6 mm
Eye Relief	45 mm
Diopter (Range)	-5 D to 3 D
System	
Digital Zoom	1×, 2×, 4×, 8×
Capture Snapshot	Yes
Record Video	On-board video recording
Standby Mode	Yes
Storage	Built-in EMMC (16 GB)
PIP	Yes
DPC	Yes
Hotspot	Yes
Uniformity Correction	Auto, Manual, External Correction
Hot Track	Yes
Reticle	Yes
Power Supply	
Battery Type	One Rechargeable Lithium battery
Battery Operating Time	5 hours continuous running (@25°C, Wi-Fi and CVBS off)
Battery Capacity Display	Yes
Anti-reverse Battery Connection	Yes
Overvoltage Protection	Yes
Type-C Power Supply	5 V DC/2 A, USB Type-C interface3 Supports external power supply
General	
Work Temperature/Humidity	-30°C to 55°C (-22°F to 131°F)
Protection Level	IP67
Dimension	214.10 × 74.30 × 88.71 mm (8.43 × 2.93 × 3.50 inch)

Est. 2007
CAMERA TRAPS cc
YOUR PATIENT WITNESS
www.cameratraps.co.za

Weight	< 585 g without eyepiece and batteries
Port	Type-C
Laser Rangefinder	
Safety Class for Laser	Class 1
Wavelength	905 nm
Max. Measuring Range	600 m
Measurement Accuracy	± 1 m
Min. Measuring Range	10 m

Available Model

HM-TR26-50XG/W-PQ50L

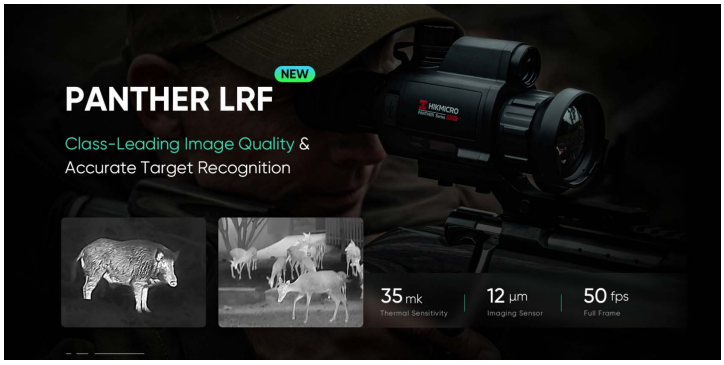

COMPLIANCE NOTICE: The thermal series products might be subject to export controls in various countries or regions, including without limitation, the United States, European Union, United Kingdom and/or other member countries of the Wassenaar Arrangement. Please consult your professional legal or compliance expert or local government authorities for any necessary export license requirements if you intend to transfer, export, re-export the thermal series products between different countries.

Dimension

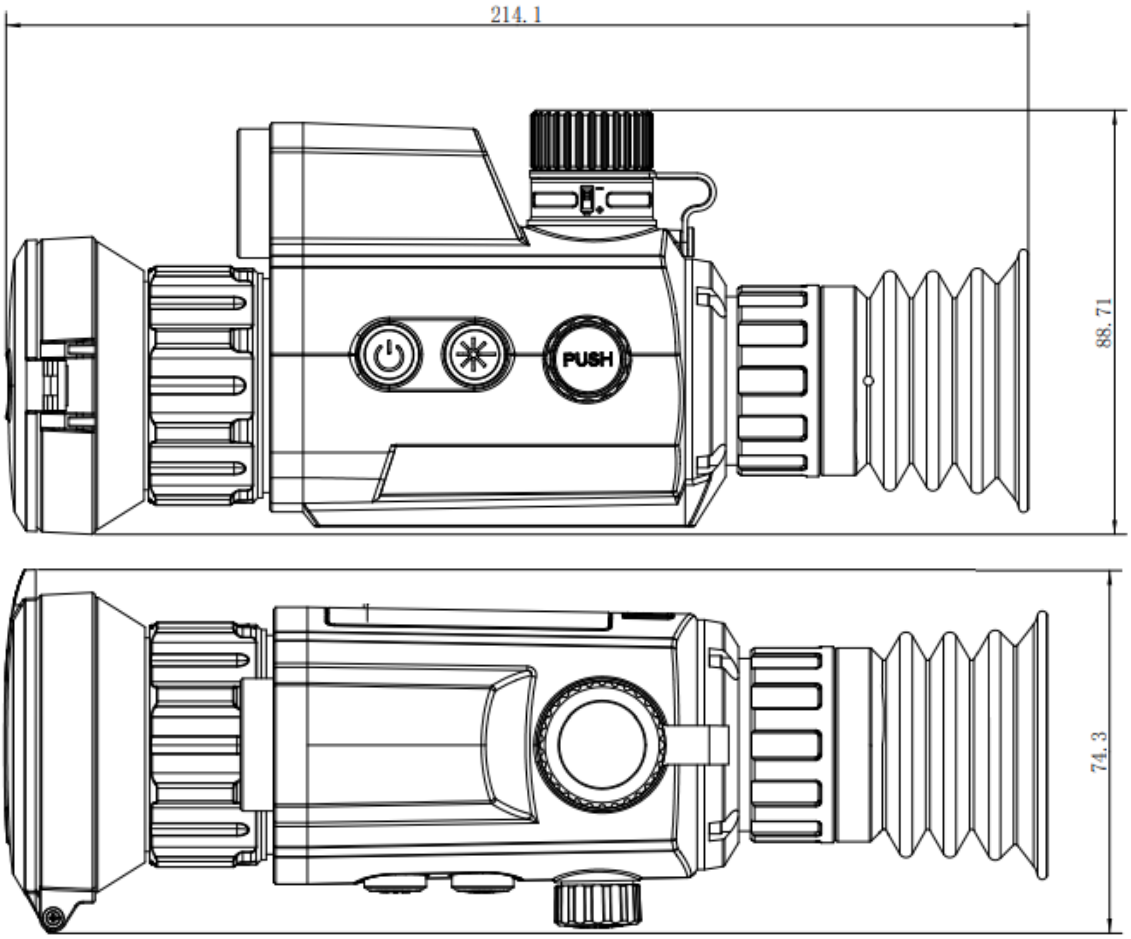

Unit：mm

Accessory

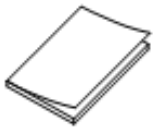

Quick Start Guide (×1)

Battery (×2)

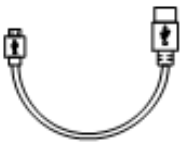

Type-C Cable (×1)

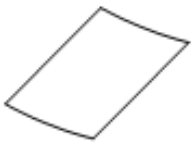

Dust-free Cloth (×1)

Bag (×1)

Battery Charger

Optional

Quick-release Rail